SPLIT&FLUTED

EP HENRY®

Values that Endure®

[INTEGRATED ARCHITECTURAL SOLUTIONS]

[PROFILE CONCRETE MASONRY] ENGINEERED WALL SYSTEMS | ENVIRONMENTAL PAVERS | PAVER SYSTEMS

ROCKFACE™

■ *West Oak Lane Charter School, Philadelphia, PA*
RockFace 50R and 16B-Sp, Decro-Face 500Sp

CONTENTS

RockFace™	2
4 Rib & 6 Rib	4
Styles I, II, III	6
ShadowStone, Castle Rock, & Split Stone	8
Colors	10
Specification	11

■■ *Arcadia University, Glenside, PA*
RockFace and DecroStone TwinTone 85

Finishing Touch RockFace Sill Block, available in a variety of sizes and chamfers.

■■■ *Purdy Automotive, Galloway, NJ*
RockFace 40B and 37D

SHAPES

4" x 8" x 16"
Solid Stretcher*

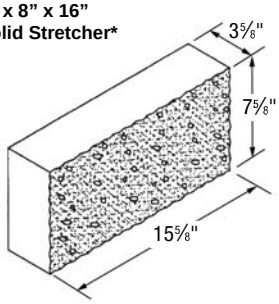

4" x 8" x 16"
Ell Corner*

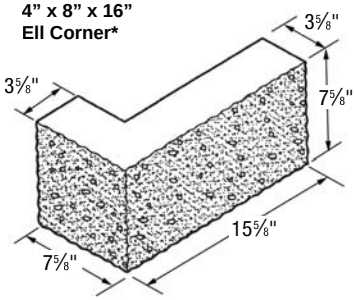

6" x 8" x 16"
Stretcher*

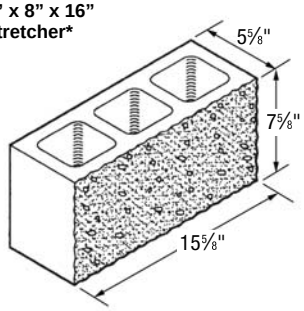

8" x 8" x 16"
Stretcher (Splittable)*

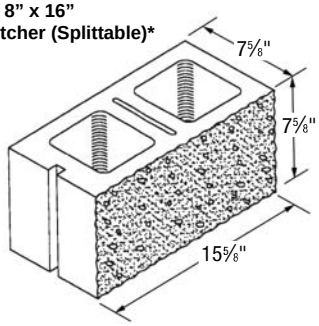

8" x 8" x 16"
Bond Beam

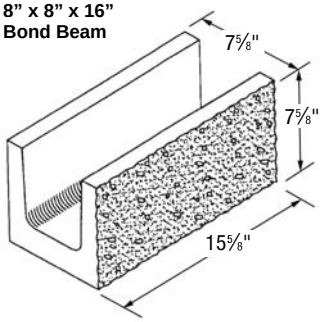

10" x 8" x 16"
Stretcher (Splittable)

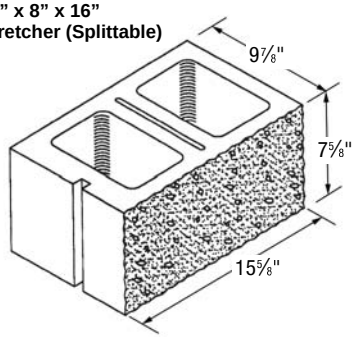

12" x 8" x 16"
Stretcher (Splittable)

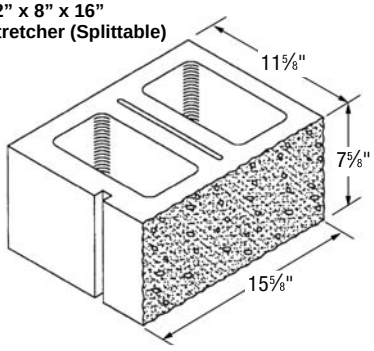

12" x 8" x 16"
Bond Beam

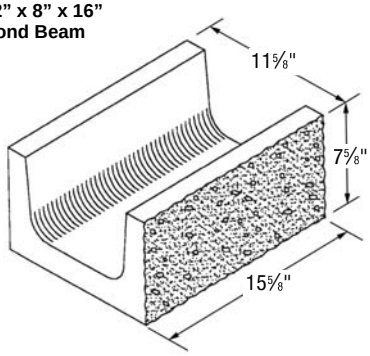

Universal Corner*

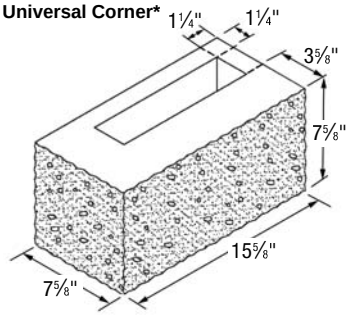

***** Also available with center score.
** Knock-out Bond Beam available in 8" and 12" sizes.

Sills and other special shapes available. Please see our Shapes & Sizes Catalog for a complete listing at www.ephenry.com/technical-information-library.

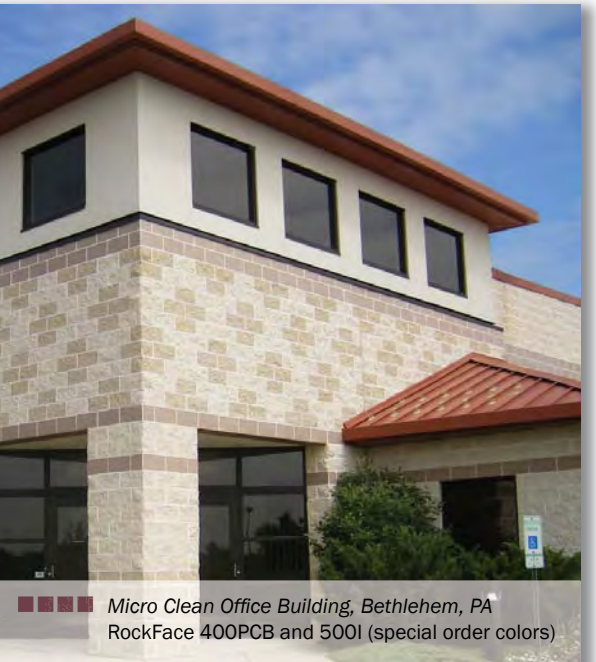

Micro Clean Office Building, Bethlehem, PA
RockFace 400PCB and 500I (special order colors)

Hilton Homewood Suites, Bala Cynwyd, PA
RockFace 500 and 509

4 RIB & 6 RIB SPLIT FLUTED™

Ribbed block create an interesting vertical banding effect in contrast to the horizontal RockFace block.

■ *Bunzl Distribution, North Wales, PA*
4 Rib 54N and 500, RockFace 40 and 500

■■ *Francis Gorman Manor, Gloucester City, NJ*
6 Rib 37D, RockFace 24B, Smooth Colored 40-10C

■■■ *Teva Pharmaceuticals, Montgomeryville, PA*
4 Rib 15B and 18B, RockFace 15B

SHAPES

4 RIB

4" x 8" x 12" Corner

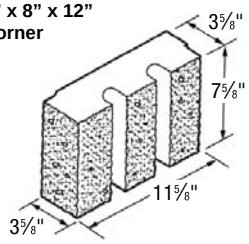

4" x 8" x 16" Stretcher

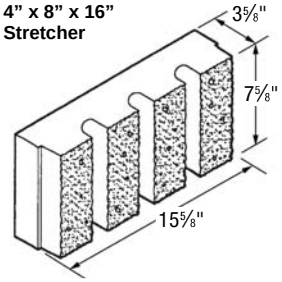

6" x 8" x 16" Stretcher

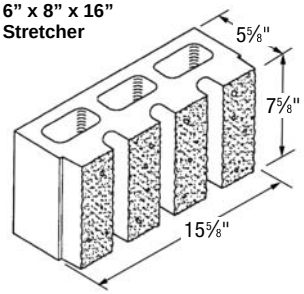

8" x 8" x 16" Stretcher

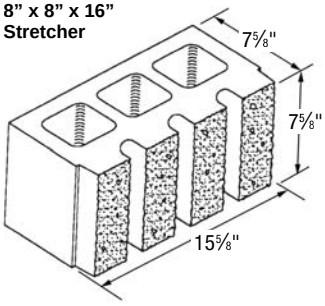

12" x 8" x 16" Hollow Stretcher

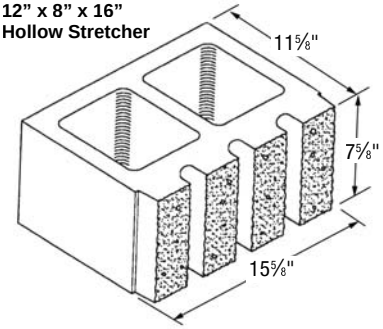

CALL 800 44 HENRY OR VISIT EPHENRY.COM FOR MORE INFORMATION ON OUR COMPLETE PRODUCT OFFERING OF CONCRETE BLOCK, CAST VENEER STONE, PAVING STONES, RETAINING WALLS AND MORE.

6 RIB

4" x 8" x 16" Stretcher

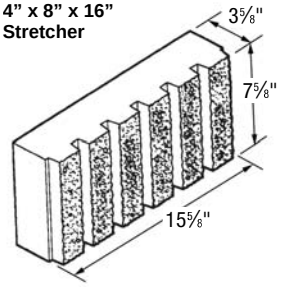

4" x 8" x 16" Ell Corner

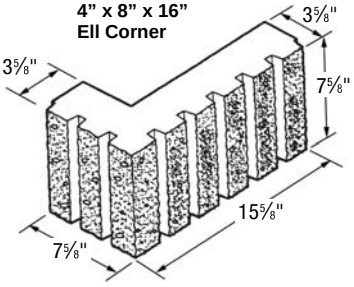

6" x 8" x 16" Stretcher

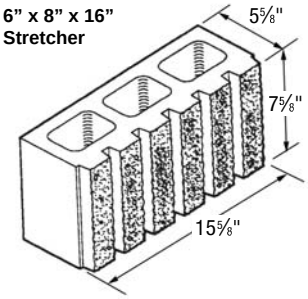

8" x 8" x 16" Corner

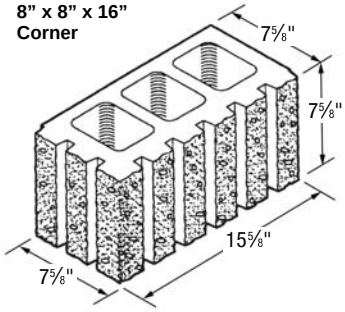

8" x 8" x 16" Stretcher (Splittable)

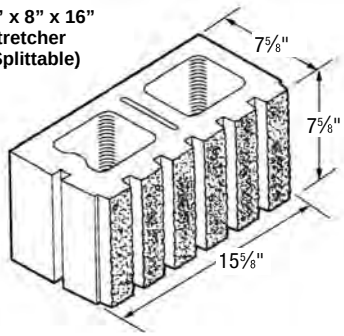

12" x 8" x 16" Stretcher

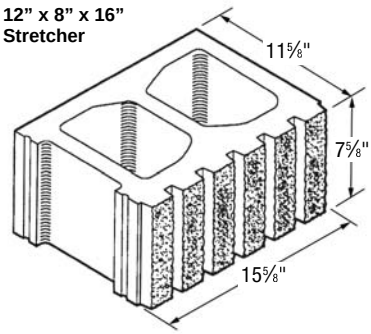

8" x 8" x 16" Bond Beam

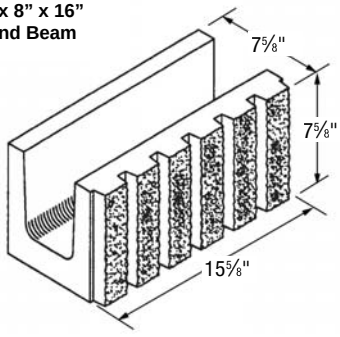

12" x 8" x 16" Bond Beam

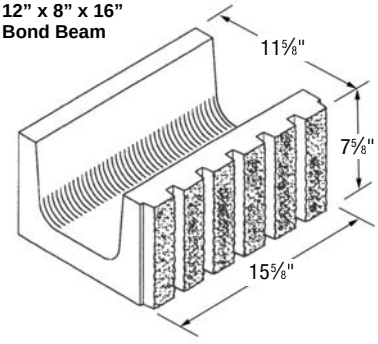

STYLE I, STYLE II & STYLE III™

Style II offers a wider "joint" appearance than a center scored RockFace.

Forest Park Office Warehouse, West Deptford, NJ
Style II Twin Tone 87, RockFace 10B, Smooth Colored Twin Tone 87C

Style I has a unique look created from 2 different scales of vertical ribbing.

Atlantic County Fire Training Center, Egg Harbor Township, NJ
Style I (custom color), ShadowStone 19B, RockFace and Decro-Face 507

Office Warehouse, Hatfield, PA
Style III Twin Tone 64, 6 Rib 21B

SHAPES

STYLE I

4” x 8” x 16” Stretcher

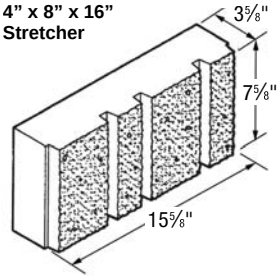

4” x 8” x 16” Ell Corner

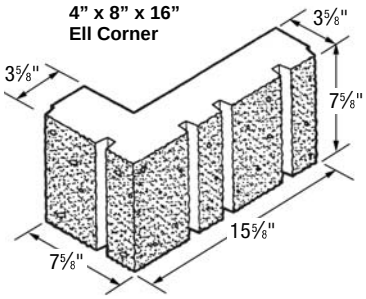

8” x 8” x 16” Stretcher

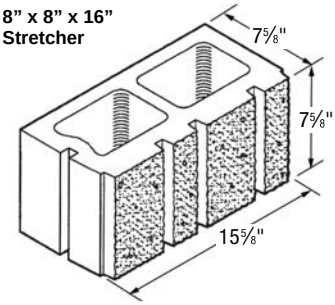

8” x 8” x 16” Corner

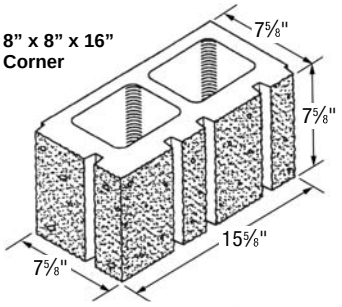

12” x 8” x 16” Stretcher

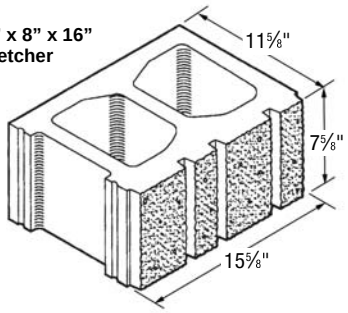

STYLE II

4” x 8” x 16” Stretcher

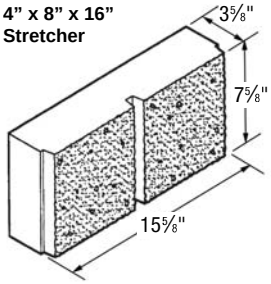

4” x 8” x 16” Ell Corner

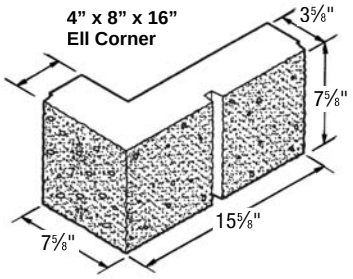

6” x 8” x 16” Stretcher

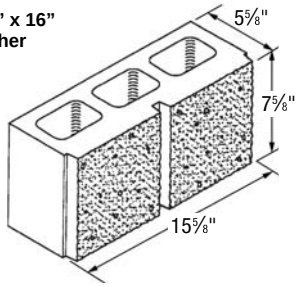

8” x 8” x 16” Corner

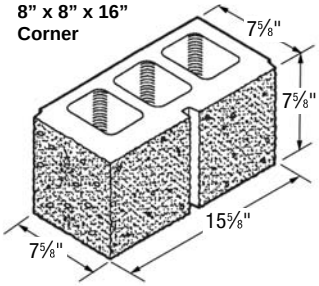

8” x 8” x 16” Stretcher (Splittable)

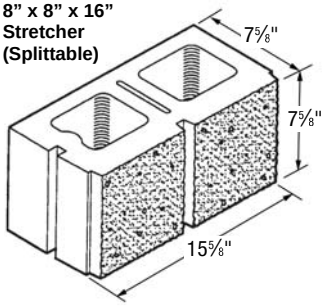

8” x 8” x 16” Bond Beam

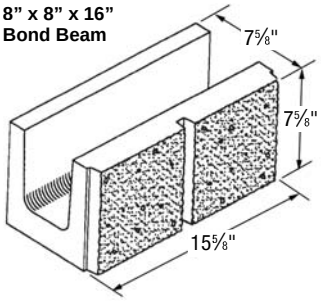

12” x 8” x 16” Stretcher

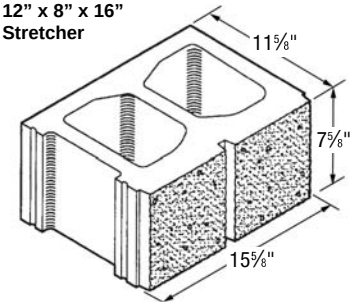

STYLE III

4” x 8” x 16” Stretcher

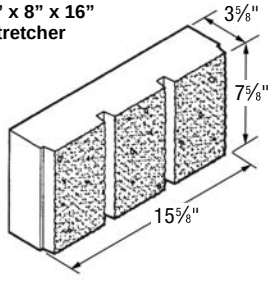

4” x 8” x 16” Ell Corner Style “B”

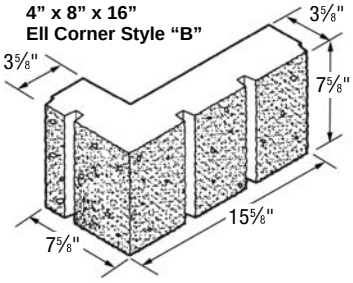

8” x 8” x 16” Ell Corner Style “A”

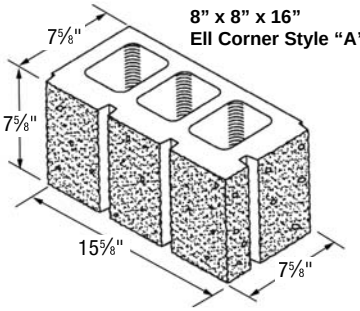

8” x 8” x 16” Bond Beam

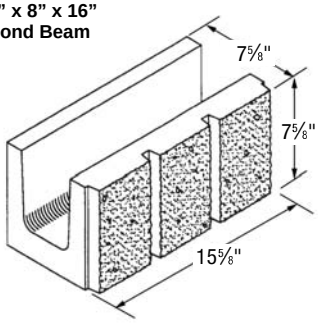

8” x 8” x 16” Stretcher (Splittable)

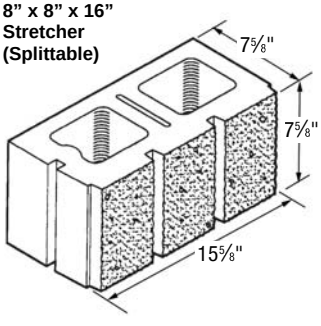

12” x 8” x 16” Stretcher

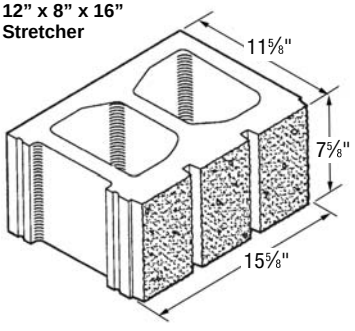

SHADOW STONE™ - CASTLE ROCK™ - SPLIT STONE™

ShadowStone and CastleRock use 2 unique offset split profiles to create rugged texture and a deeper shadow effect, which is equally dramatic inside and out.

■ *Temple Beth El, Allentown, PA*
Shadow Stone 40B (above and left)

■■ *Charles Chrin Community Center, Palmer Township, NJ*
Splitstone 40R and 32DS, DecroStone 40R

SHAPES

SHADOW STONE™

4" x 8" x 16" Corner

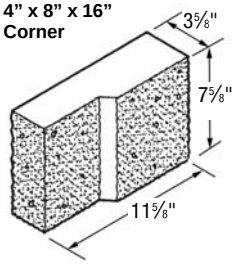

4" x 8" x 16" Stretcher

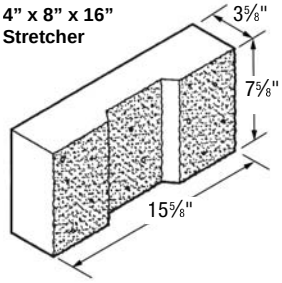

8" x 8" x 16" Stretcher (Splittable)

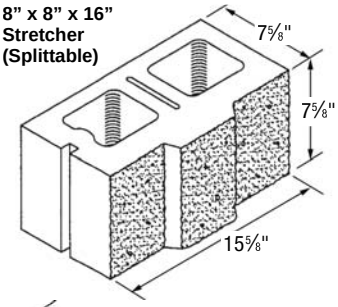

12" x 8" x 16" Stretcher

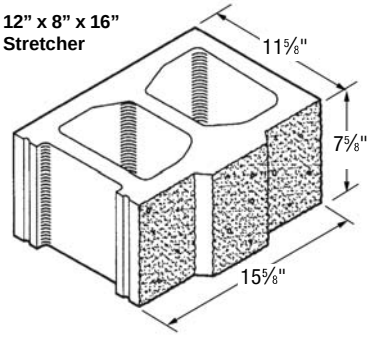

12" x 8" x 16" Bond Beam

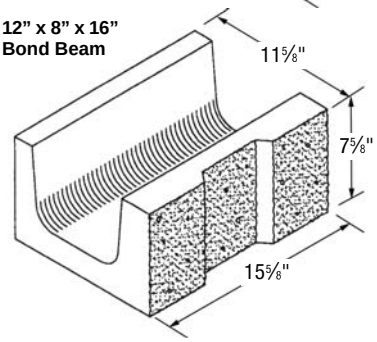

IT IS NOT JUST THE BEAUTY OF A BUILDING YOU SHOULD LOOK AT; ITS THE MATERIALS THAT CREATE ITS FOUNDATION THAT WILL STAND THE TEST OF TIME.

CASTLE ROCK™

4" x 8" x 12" Corner

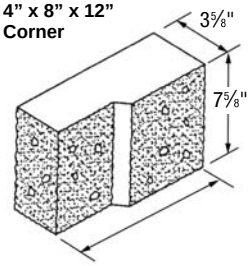

4" x 8" x 16" Stretcher

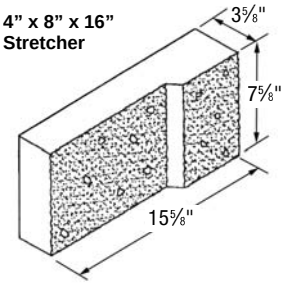

8" x 8" x 16" Stretcher (Splittable)

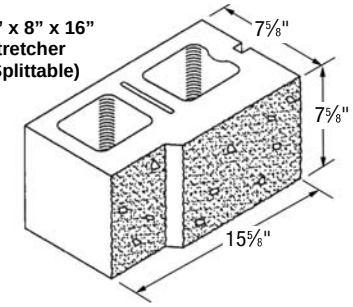

12" x 8" x 16" Stretcher

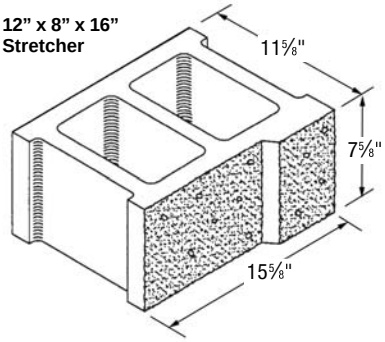

12" x 8" x 16" Bond Beam

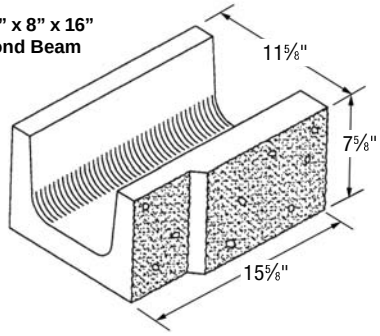

Please contact your EP Henry Sales Representative regarding additional color, aggregate offerings, and shapes.

Visit **www.ephenry.com/technical-information**

SPLIT STONE™

2¼" x 4" x 12" Corner

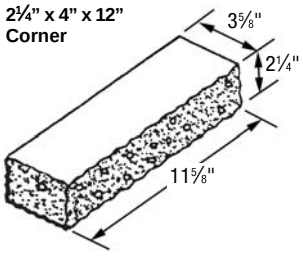

2-1/4"h x 4"d available in 8" Stretcher, 8" Corner, 12" Corner, 16" Stretcher

3" x 4" x 12" Stretcher

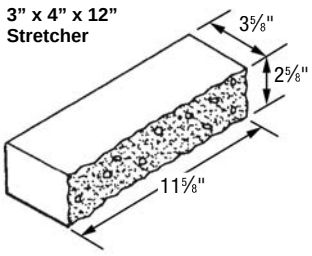

3"h x 4"d available in 8" Corner, 12" Corner and 16" Stretcher

4" x 4" x 12" Stretcher

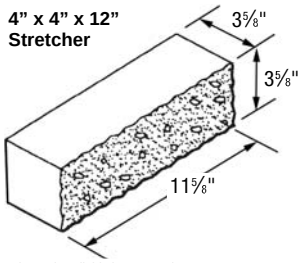

4"h x 4"d available in 8" Stretcher, 8" Corner, 12" Stretcher, 12" Corner and 16" Stretcher

COLORS

EARTHTONE™

11B

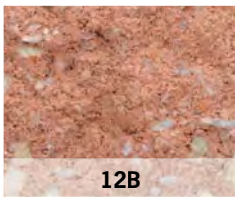
12B

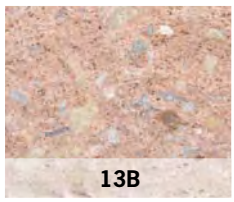
13B

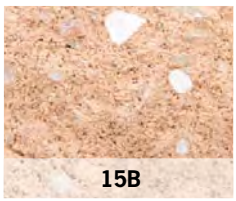
15B

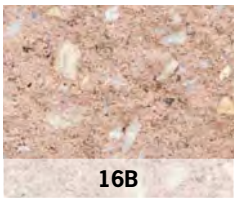
16B

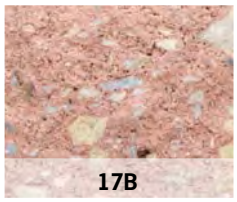
17B

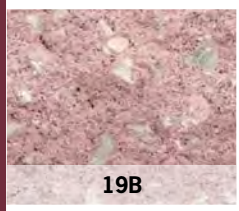
19B

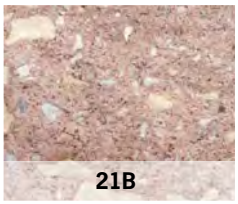
21B

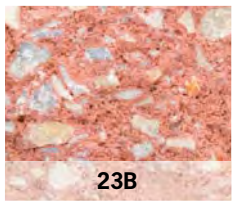
23B

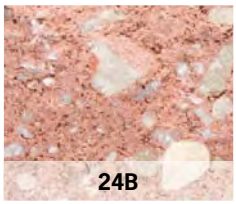
24B

26B

26D-SP

28N

31B

37B

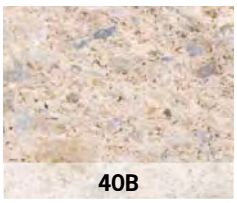
40B

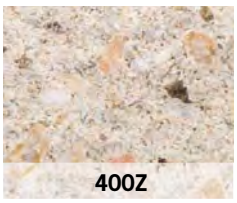
400Z

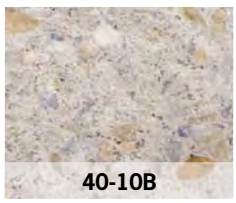
40-10B

TWINTONE™

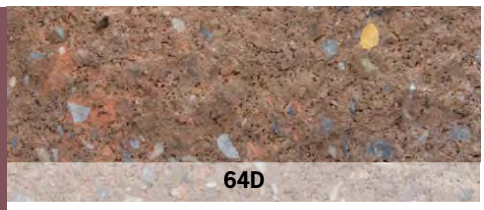
64D

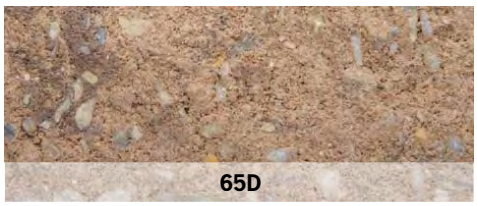
65D

74D

75D

85

87

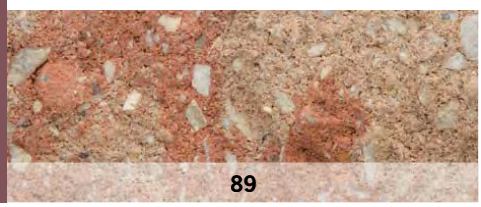
89

90

91

FIORI™

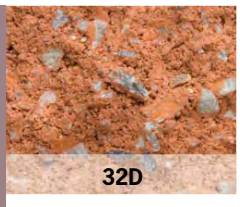
32D

50N

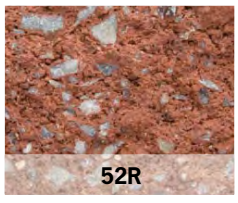
52R

54N

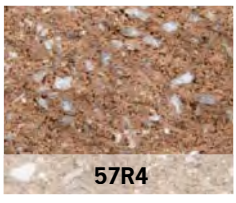
57R4

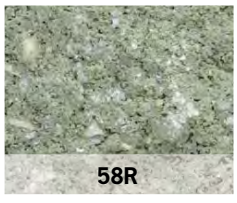
58R

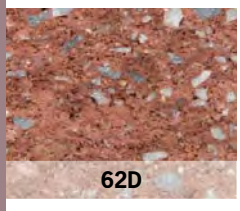
62D

400R

400ZS

500

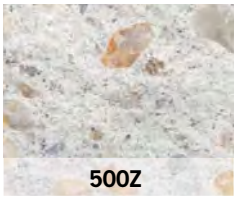
500Z

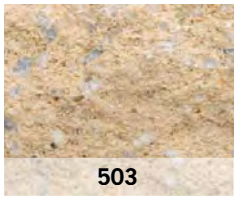
503

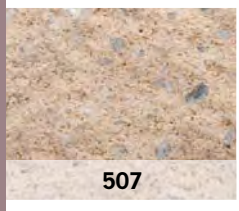
507

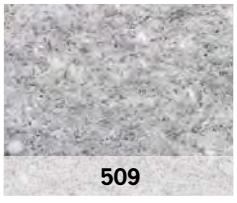
509

509 SP

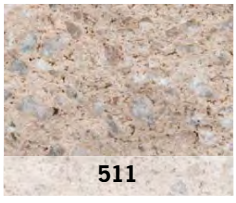
511

512

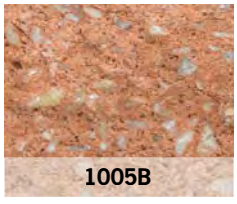
1005B

Please contact your EP Henry Sales Representative regarding custom colors.

Visit **www.ephenry.com/technical-information**

SPECIFICATIONS

The following specification is intended to serve as a guideline only and was developed as a service to architects and designers. It is the responsibility of the user to review and modify this specification as necessary and appropriate for the particular details of his/her project. EP Henry accepts no responsibility for the suitability of this specification for any given project. A more detailed specification is available.

Section 04200 - Unit Masonry

Part 1 - General

Quality Assurance

Single Source Responsibility for Masonry Units: Obtain exposed masonry units of uniform texture and color, or a uniform blend within the ranges accepted for these characteristics, from one manufacturer for each different product required for each continuous surface or visually related surfaces.

Field Source Mock-Ups: Prior to installation of masonry work, erect sample wall panels to further verify selections made for color and textural characteristics, under sample submittals of masonry units and mortar, and to represent completed masonry work for qualities of appearance, materials and construction.

Submittals:

Standards: Comply with recommendations of National Concrete Masonry Association (NCMA).

Submittals: Submit product data for each type of masonry unit and mortar required. Submit samples for same.

Part 2 - Products

Concrete Masonry Units

General: Comply with requirements indicated below applicable to each form of concrete masonry unit repaired. Provide *special shapes* where indicated and as follows:

For window sills, lintels, corners, jambs, sash, control joints, headers, bonding, and other special conditions. Square-edged units for outside corners, except where indicated as bullnose.

Size: Provide concrete masonry units complying with requirements indicated below for size that are manufactured to specified face dimensions within tolerances specified in the applicable referenced ASTM specification for concrete masonry units.

Concrete Masonry Units: Manufactured to specified dimensions of 3/8 inch less than nominal widths by nominal lengths indicated on drawings and specified herein.

Hollow and Solid Load-Bearing Concrete Masonry Units: ASTM 90, Type I

Weight Classification: Normal weight.

Exposed Faces: Manufacturer's standard color and texture, unless otherwise indicated. Where *special finishes* are indicated, provide units with exposed faces of the following general description matching color and texture of Architect's sample (RockFace, Split Fluted, etc.) Where special patterns are indicated, provide units with exposed faces matching color, texture and pattern of Architect's sample.

Moisture Proofing: If required, all concrete block in exterior applications shall be manufactured with Dry Block Integral Water Repellent System by Grace Construction Products. To achieve the full effects of this system, Dry Block mortar admix must be added to the mortar onsite.

Insulation: Provide core insulation "Icon" inserts (R=___) by CBIS/Korfil.

Products: Subject to compliance with requirements, provide the following (*refer to Architectural cmu section for listing block styles*):

e.g., "RockFace concrete masonry units", EP Henry Corp., Woodbury, NJ; 800-444-3679; Colors(s): _____

"DecroFace® concrete masonry units", EP Henry Corp., Woodbury, NJ; 800-444-3679; Colors(s): _____

"GroundFace concrete masonry units", EP Henry Corp., Woodbury, NJ; 800-444-3679; Colors(s): _____

EP Henry has been the commercial and residential building industry leader for quality architectural products since 1903. With architectural block, Cast Veneer Stone, retaining walls, pavers and permeable paving systems and more, our integrated product lines are engineered for a lifetime of performance and beauty. That's a promise we stake our reputation on everyday, as can you. For more information or to meet with your EP Henry Commercial Architectural Products Group representative, please call 800-444-3679 or visit us at www.ephenry.com.

Cover photo: St. Basil the Great Catholic Church, Kimberton, PA
Splitstone 40-10B, RockFace 16B, DecroFace Sills 17D

EP HENRY
[INTEGRATED ARCHITECTURAL SOLUTIONS]

www.ephenry.com ▪ 800.444.3679
PO BOX 615 | WOODBURY, NEW JERSEY 08096